CANTHARELLUS 200 LED 20W

5522



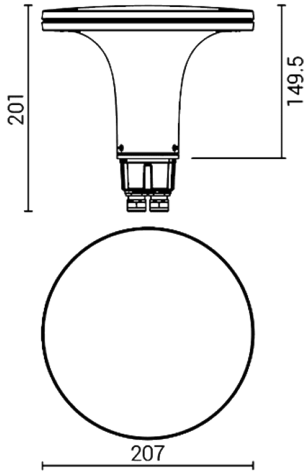

Outdoor luminaire for pole installation

The Ø 200 version is recommended for 800 mm high pole (code 3422) and 1875 mm high pole (code 3423)

Material: upper part and body in low copper content die-cast aluminium / Anti-glare aluminium internal cone

Diffuser: clear satin polycarbonate

Light source: mains voltage LED module, compatible with phase-cut dimmers

Equipped with two M16 cable glands to allow through wiring

Finish with double painting (epoxy-based primer and polyester powder coating) after anti-corrosion treatments

On request versions (additional code):
24V 24V low voltage

Dimensions	Ø 207 x H 150 mm
Light source	LED
Wattage	20 W
Power supply	220-240 V | 50/60 Hz
Light source output	2400 lm
System output	1849 lm
System efficiency	92 lm/W
Color Rendering Index – CRI	80
LED energy class	E (4000K), F (2700K), F (3000K)
LED lifetime	L70 B50 > 50.000 h
Standard Deviation Color Matching (SDCM)	MacAdam step 3
Electrical insulation class	Class I
IP rating	IP 65
Impact resistance rating	IK 10 (20 joules)
Norms	EN 60598-1 +2-1
Weight	1.02 kg
Conformity	CE UK CA

CODE OPTIONS

FINISH

AN	ANTHRACITE

on request:

AG	ALUMINIUM GREY
CO	CORTEN
BR	BRONZE

COLOUR TEMP.

27K	2700K
3K	3000K
4K	4000K

goccia ILLUMINAZIONE

Goccia Illuminazione srl
via E.Fermi 59/65 - 25020 Poncarale (BS) Italy
+39 030 2640761 - info@www.goccia.it

IMQ CERTIFIED QUALITY MANAGEMENT SYSTEM ISO 9001:2015
IQNET RECOGNIZED CERTIFICATION

CANTHARELLUS 200 LED 20W

5522

ACCESSORIES

ACCESSORIES
ADAPTOR



5506

ACCESSORIES
POLE H 800

3422

ACCESSORIES
ANCHOR PLATE



5519

ACCESSORIES
POLE H 1875

3423

CANTHARELLUS THE SERIES



