goccia ILLUMINAZIONE

I-DEA E27 33W

5536



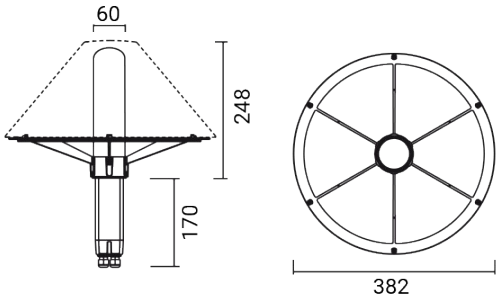

Outdoor luminaire for pole/wall installation

It can be installed on Goccia Illuminazione poles or on any standard Ø 60 mm pole

Material: lamp housing with die-cast aluminium spoked support / Self-extinguishing technopolymer wiring box

Diffuser: clear polycarbonate

Luminaire supplied without light source

Equipped with two M16 cable glands to allow through wiring

Dimensions	Ø 382 x H 418 mm
Light source	E27
Light source info	Ø < 50 mm
Wattage	33 W
Power supply	220-240 V | 50/60 Hz
Electrical insulation class	Class II
IP rating	IP 65
Norms	EN 60598-1 +2-1
Weight	0.79 kg
Conformity	CE UK CA

CODE OPTIONS

FINISH

AN ANTHRACITE

on request:

CO CORTEN
BR BRONZE

I-DEA E27 33W

5536

COMPONENTS

I-DEA
LAMPSHADE



5531

I-DEA PREZIOSA
GLASS LAMPSHADE



5534

ACCESSORIES

ACCESSORIES
SPIKE



5505

ACCESSORIES
POLE H 375

3421

ACCESSORIES
POLE H 800

3422

ACCESSORIES
ANCHOR PLATE



5519

I-DEA THE SERIES



