I-DEA LAMPSHADE

5531



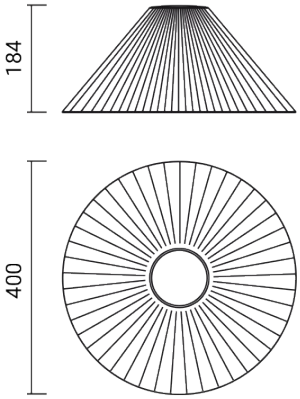

Lampshade with special internal light-diffusion grooving

Material: UV resistant polycarbonate

Impact resistance rating	IK 10 (20 joules)
Weight	0.84 kg
Conformity	CE UKCA

I-DEA LAMPSHADE

5531

FIXTURES RELATED

I-DEA
LED



5537

I-DEA



5536

CODE OPTIONS

FINISH

AR	ORANGE
BL	BLUE
OP	OPAL
VE	GREEN