PASSUM Ø 125 in-ground box

1421



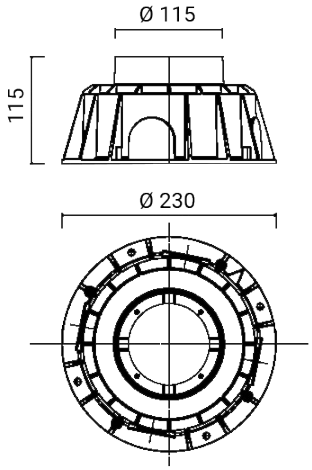

In-ground or wall recessed box

Material: technopolymer

Dimensions	Ø 230 x H 115 mm
Weight	0.49 kg
Conformity	CE UKCA

PASSUM Ø 125 in-ground box

1421

FIXTURES RELATED

PASSUM UP
Ø 125 ALUMINIUM



1422

PASSUM UP
Ø 125 ALUMINIUM



1424

PASSUM UP
Ø 125 STAINLESS STEEL



1495

PASSUM SIDEWARDS
Ø 125 ALUMINIUM



1427

PASSUM SIDEWARDS
Ø 125 STAINLESS STEEL



1485

PASSUM UP
Ø 125 STAINLESS STEEL



1496

RGBW PASSUM UP
125



1462