PASSUM UP Ø 245 stainless steel round flange

1542



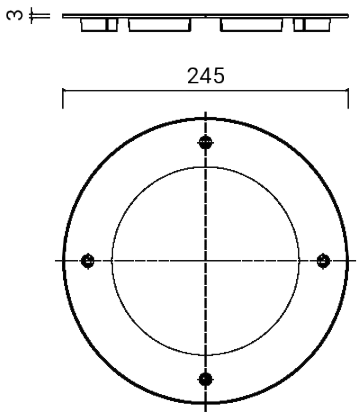

Covering flange

Normally supplied separately from the luminaire

Material: AISI 316L stainless steel

Dimensions	Ø 245 x 3 mm
Weight	0.6 kg
Conformity	CE UKCA

PASSUM UP Ø 245 stainless steel round flange

1542

FIXTURES RELATED

PASSUM UP
Ø 245 ALUMINIUM



1440

PASSUM UP
Ø 245 ALUMINIUM



1442

PASSUM UP
Ø 245 ALUMINIUM



1444

RGBW PASSUM UP
245



1482

PASSUM ASYMMETRIC
Ø 245 ALUMINIUM



1449

CODE OPTIONS

FINISH

IN	STAINLESS STEEL