SERVER POINT anchor plate

5309



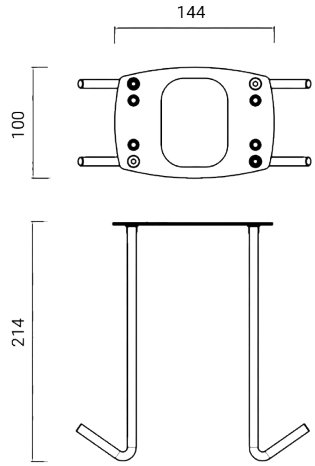

Dimensions	144 x 100 x H 214 mm
Weight	0.55 kg
Conformity	CE UK CA

Goccia Illuminazione srl
via E.Fermi 59/65 - 25020 Poncarale (BS) Italy
+39 030 2640761 - info@www.goccia.it

IMQ CERTIFIED
QUALITY MANAGEMENT SYSTEM ISO 9001:2015
IQNET RECOGNIZED CERTIFICATION

SERVER POINT anchor plate

5309

FIXTURES RELATED

SERVER POINT
1



5301

SERVER POINT
2



5302

SERVER POINT
1 - CEE 17



5303