PASSUM UP Ø 180 stainless steel LED 8W

1497



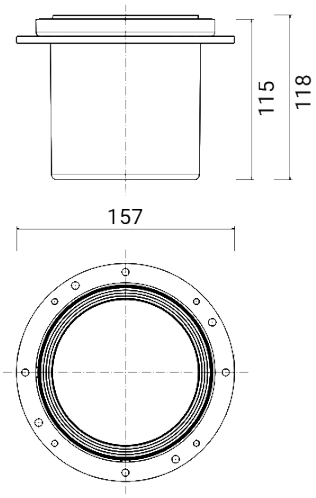

Outdoor ground/wall recessed luminaire

Max. load pressure 2.300 kg (in-ground box + luminaire + covering flange together for drive-over use)

Material: AISI 316L stainless steel

Diffuser: ultra-white transparent tempered glass

Built-in driver

Light source: LED unit / Adjustable optics ±15°

Pre-wired with 0,5 m H07RN-F buriable cable (optional waterproof connections to be ordered separately - codes 1941-1942-1944)

On request versions (additional code):

D Dimmable version

Dimensions	Ø 157 x H 129 mm
Light source	LED
Wattage	8 W
Power supply	100-240 V | 50/60 Hz
Light source output	951 lm
System output	636 lm
System efficiency	80 lm/W
Color Rendering Index – CRI	80
LED energy class	E
LED lifetime	L80 B10 86.000 h
Standard Deviation Color Matching (SDCM)	MacAdam step 3
Electrical insulation class	Class I
IP rating	IP 65/67
Impact resistance rating	IK 10 (20 joules)
Norms	EN 60598-1 +2-13
Weight	1.5 kg
Conformity	CE UK CA

CODE OPTIONS

COLOUR TEMP.

27K	2700K
3K	3000K
4K	4000K

OPTIC

standard	38°

optional optics

18	18°
90	90°

Goccia Illuminazione srl
via E.Fermi 59/65 - 25020 Poncarale (BS) Italy
+39 030 2640761 - info@www.goccia.it

PASSUM UP Ø 180 stainless steel LED 8W

1497

COMPONENTS

PASSUM
Ø 180 IN-GROUND BOX



1431

PASSUM UP
Ø 180 ALUMINIUM ROUND FLANGE



1531

PASSUM UP
Ø 180 STAINLESS STEEL ROUND FLANGE



1532

PASSUM UP
Ø 180 STAINLESS STEEL SQUARE FLANGE



1533

ACCESSORIES

ACCESSORIES
WATERPROOF CONNECTOR



1941

ACCESSORIES
WATERPROOF CONNECTOR



1944

ACCESSORIES
WATERPROOF CONNECTOR



1942

PASSUM UP
Ø 180 ANTI-GLARE LOUVRE



1971

PASSUM UP THE SERIES







