PASSUM UP Ø 180 stainless steel GU10 7-8W

1498

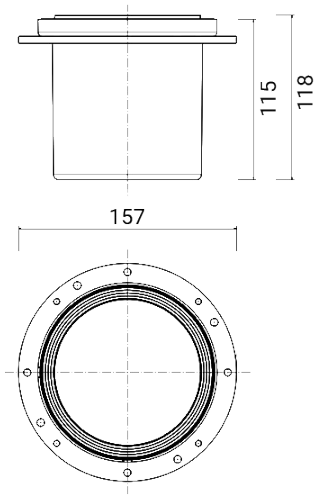

Outdoor ground/wall recessed luminaire

Max. load pressure 2.300 kg (in-ground box + luminaire + covering flange together for drive-over use)

Material: AISI 316L stainless steel

Diffuser: ultra-white transparent tempered glass

Driver not necessary

Luminaire supplied without light source / Adjustable optic ±10°

Pre-wired with 0,5 m H07RN-F buriable cable (optional waterproof connections to be ordered separately - codes 1941-1942-1944)

Dimensions	Ø 157 x H 129 mm
Light source	GU10
Light source info	L < 86 mm
Wattage	7-8 W
Power supply	220-240 V | 50/60 Hz
Electrical insulation class	Class I
IP rating	IP 67
Impact resistance rating	IK 10 (20 joules)
Diffuser contact temperature	≤ 40°C
Norms	EN 60598-1 +2-13
Weight	1.4 kg
Conformity	CE UKCA

Goccia Illuminazione srl
via E.Fermi 59/65 - 25020 Poncarale (BS) Italy
+39 030 2640761 - info@www.goccia.it

PASSUM UP Ø 180 stainless steel GU10 7-8W

1498

COMPONENTS

PASSUM
Ø 180 IN-GROUND BOX

1431

PASSUM UP
Ø 180 ALUMINIUM ROUND FLANGE

1531

PASSUM UP
Ø 180 STAINLESS STEEL ROUND FLANGE

1532

PASSUM UP
Ø 180 STAINLESS STEEL SQUARE FLANGE

1533

ACCESSORIES

ACCESSORIES
WATERPROOF CONNECTOR

1941

ACCESSORIES
WATERPROOF CONNECTOR

1944

ACCESSORIES
WATERPROOF CONNECTOR

1942

PASSUM UP
Ø 180 ANTI-GLARE LOUVRE

1971
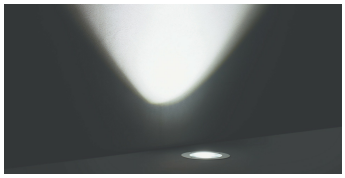
PASSUM UP THE SERIES