PASSUM UP Ø 180 stainless steel square flange

1533

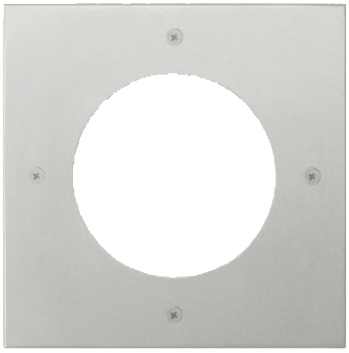

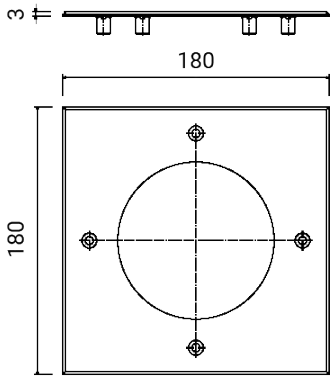

Dimensions	180 x 180 x 3 mm
Weight	0.52 kg
Conformity	CE UK CA

PASSUM UP Ø 180 stainless steel square flange

1533

FIXTURES RELATED

PASSUM UP
Ø 180 ALUMINIUM



1432

PASSUM UP
Ø 180 ALUMINIUM



1433

PASSUM UP
Ø 180 ALUMINIUM



1434

PASSUM UP
Ø 180 STAINLESS STEEL



1497

RGBW PASSUM UP
180



1464

PASSUM UP
Ø 180 STAINLESS STEEL



1498

PASSUM ASYMMETRIC
Ø 180 ALUMINIUM



1439

CODE OPTIONS

FINISH

IN STAINLESS STEEL