AREO DUO LED 56W

5576



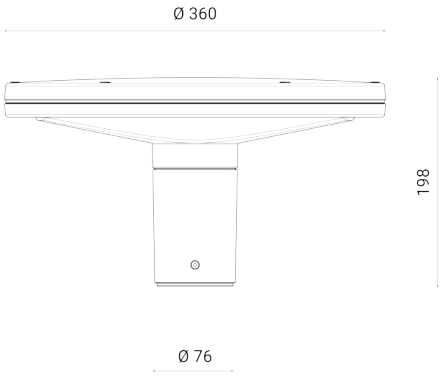

Outdoor luminaire for pole installation

It can be installed on Goccia Illuminazione Ø 76 mm dedicated steel poles or on standard Ø 60 mm metal poles

Material: low copper content die-cast aluminium

Diffuser: ultra-white transparent tempered glass with black screen printing for maximum visual comfort, sealed to the frame for maximum tightness

Built-in driver

Light source: highly performing LED modules / Symmetric and asymmetric STRADA optics

Easier wiring to the inspection door thanks to the 3x1,5 cable, 4 m long; further M16 cable gland for additional wiring

Optional surge protection device (SPD) to be ordered separately

Finish with double painting (epoxy-based primer and polyester powder coating) after anti-corrosion treatments

On request versions (additional code):

D	Dimmable version
D6	Virtual midnight

Dimensions	Ø 360 x H 198 mm
Light source	LED
Wattage	56 W
Power supply	220-240 V | 50/60 Hz
Light source output	5816 lm
System output	4136 lm
System efficiency	74 lm/W
Color Rendering Index – CRI	80
LED energy class	D
LED lifetime	L90 B10 > 100.000 h
Standard Deviation Color Matching (SDCM)	MacAdam step 3
Electrical insulation class	Class I
IP rating	IP 66
Impact resistance rating	IK 08 (5 Joules)
Norms	EN 60598-1 +2-1
Conformity	CE UK CA

CODE OPTIONS

FINISH

AN	ANTHRACITE

on request:

AG	ALUMINIUM GREY

COLOUR TEMP.

27K	2700K
3K	3000K
4K	4000K

OPTIC

standard	100°

optional optics

O2	150° X 45°
O3	90° X 30°
O4	120° X 45°
O5	150° X 70°

AREO DUO LED 56W

5576

ACCESSORIES

ACCESSORIES
SPD



1965

ACCESSORIES
POLE H 2500 – BURIABLE

3504

ACCESSORIES
POLE H 3000 – BURIABLE

3505

ACCESSORIES
POLE H 3500 – BURIABLE

3506

Goccia Illuminazione srl
via E.Fermi 59/65 - 25020 Poncarale (BS) Italy
+39 030 2640761 - info@www.goccia.it