goccia ILLUMINAZIONE

CLOCK RGBW 80 LED RGBW 12W

1186

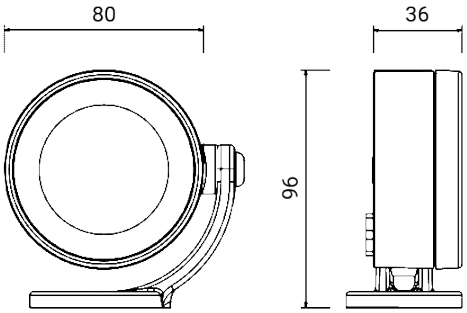

- Outdoor spotlight for wall, stem and ground installation
- Adjustable luminaire with stable fastening in the chosen point
- Material: low copper content die-cast aluminium
- Diffuser: ultra-white transparent tempered glass, sealed to the frame
- External 24V DC driver for parallel connection, compliant with EN 61347-2-13 Standard, to be ordered separately
- Light source: 1 RGBW LED and a device to receive DMX standard 512 signal sent from the control unit code 1181 or another compatible unit / The contained light source is intended for use in applications requiring high-quality coloured light
- Supplied with 0,5 m cable: signal + 24V
- Up to 32 luminaires can be connected to each control unit
- Finish with double painting (epoxy-based primer and polyester powder coating) after anti-corrosion treatments

Dimensions	Ø 80 x H 96 x 36 mm
Light source	LED RGBW
Light source info	max
Wattage	12 W
Power supply	24 Vdc
Light source output	330 lm
System output	230 lm
System efficiency	19 lm/W
Electrical insulation class	Class III
IP rating	IP 67
Impact resistance rating	IK 08 (5 Joules)
Norms	EN 60598-1 +2-1
Weight	0.44 kg
Conformity	CE UKCA

CODE OPTIONS

FINISH

AG	ALUMINIUM GREY
AN	ANTHRACITE
BR	BRONZE
VE	GREEN

on request:

CO	CORTEN
BI	WHITE

OPTIC

standard	30°

optional optics

10	10°
54	54°

CLOCK RGBW 80 LED RGBW 12W

1186

ACCESSORIES

CLOCK STEM
H 600

4693

CLOCK STEM
H 1200

4694

CLOCK STEM
H 2300

4699

CLOCK
80 SHIELD



4668

CLOCK STEM
JOINT



4695

CLOCK
SPIKE



4691

CLOCK
WALL ARM 380



4692

CLOCK STEM
WALL SUPPORT



4681

CLOCK STEM
WALL 900

4682

CLOCK STEM
WALL 1800

4683

ACCESSORIES
SIGNAL GENERATOR



1181

ACCESSORIES
24V DRIVER – 24W



1924

ACCESSORIES
24V DRIVER – 60W



1925

ACCESSORIES
24V DRIVER – 150W



1926